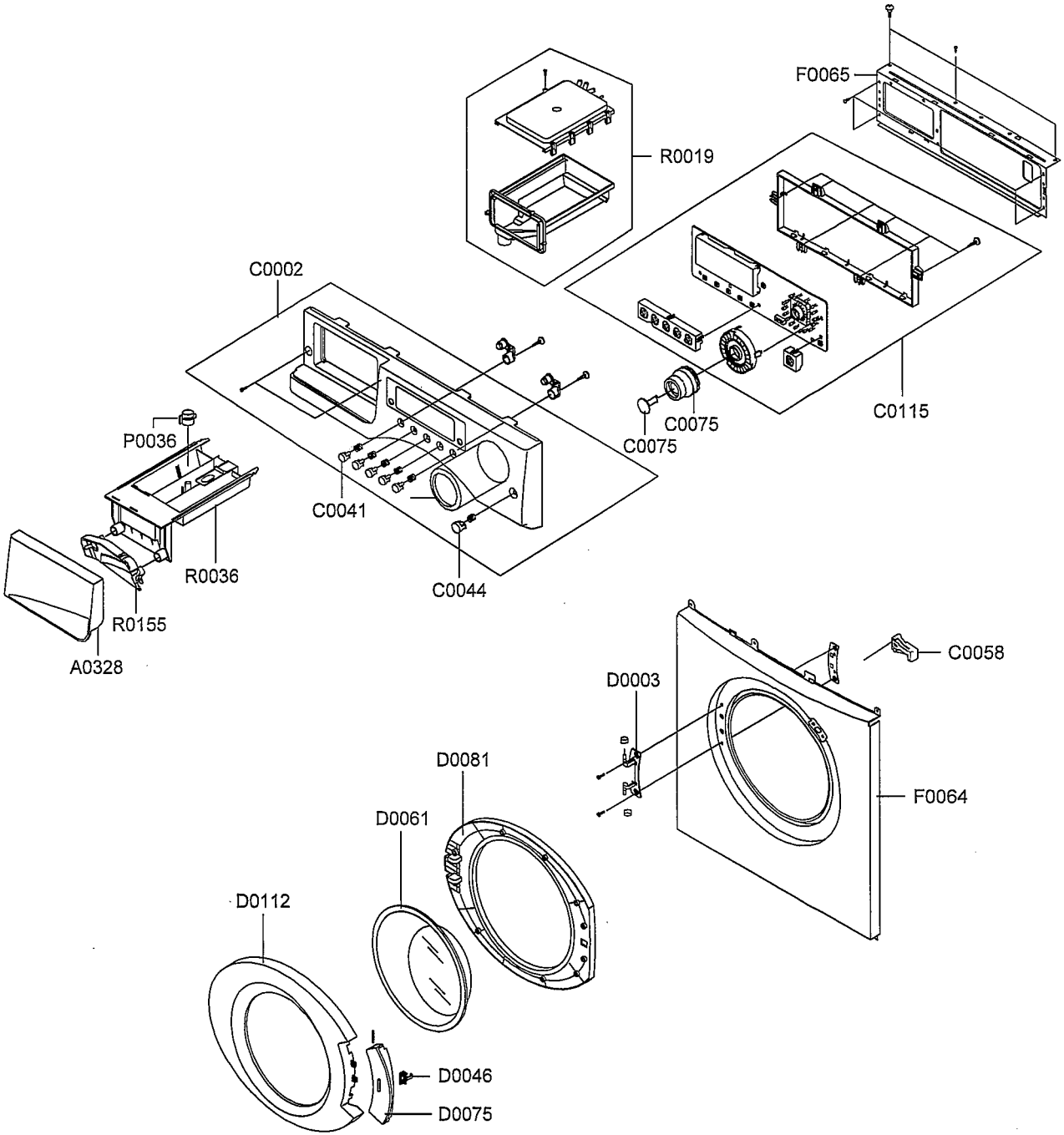
F0065
R0019
C0002
C0115
C0075
C0075
P0036
C0041
R0036
C0044
R0155
A0328
C0058
D0003
D0081
F0064
D0061
D0112
D0046
D0075

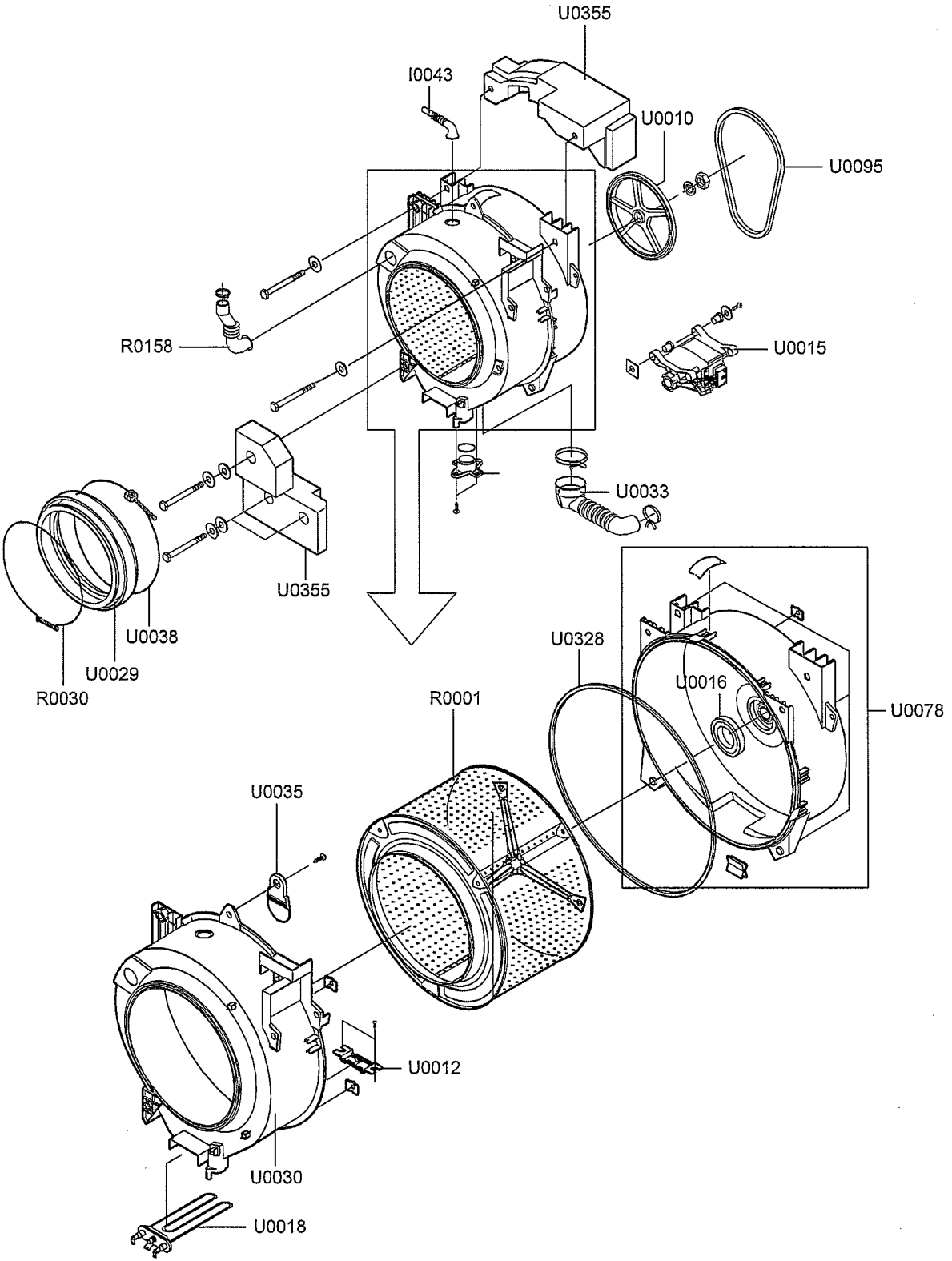
U0355
I0043
U0010
U0095
R0158
U0015
U0033
U0355
U0038
U0029
R0030
U0328
U0016
U0078
R0001
U0035
U0012
U0030
U0018

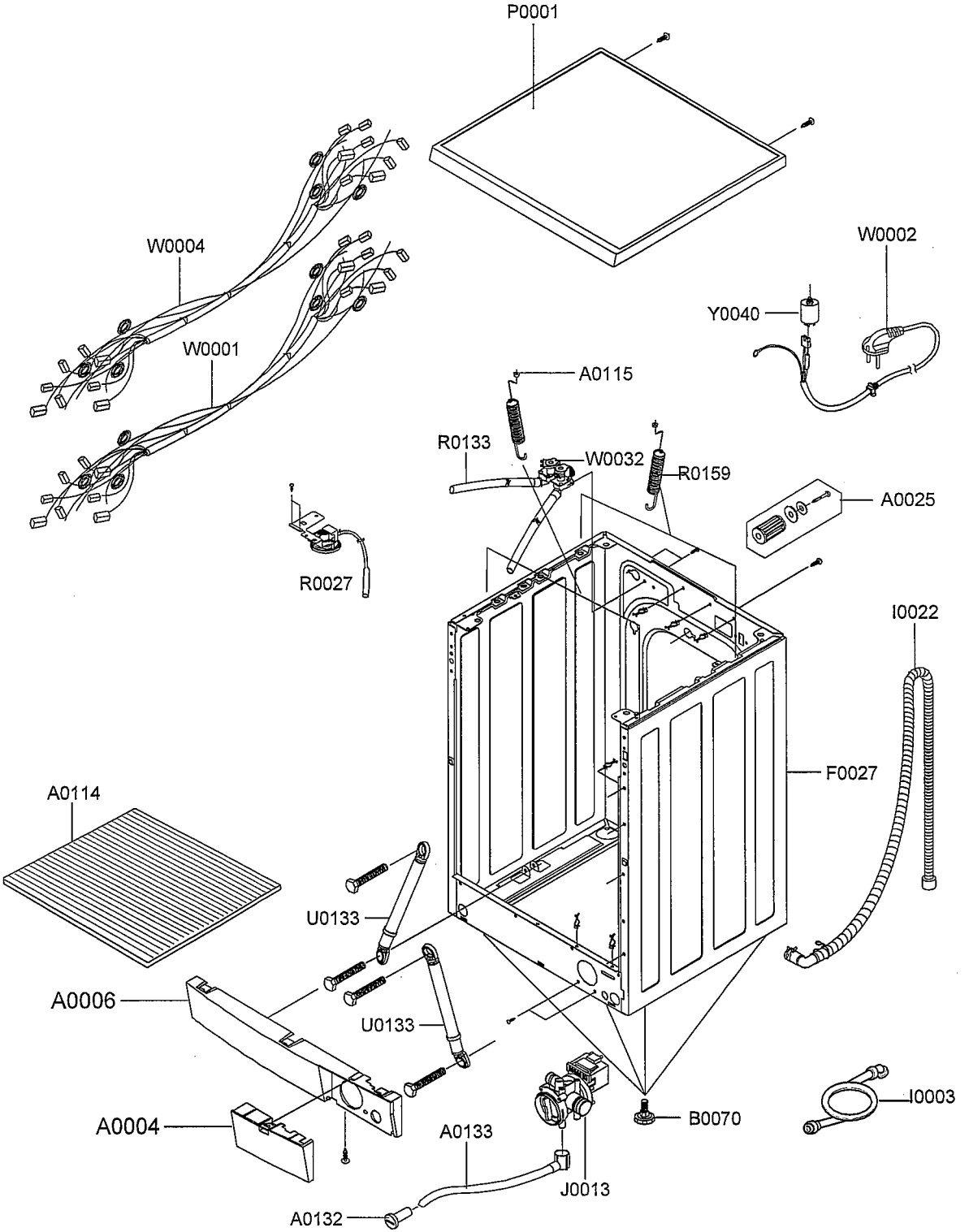
P0001
W0004
W0001
W0002
Y0040
A0115
R0133
W0032
R0159
A0025
R0027
I0022
F0027
A0114
U0133
A0006
U0133
A0004
A0133
B0070
I0003
J0013
A0132